Problem 1: The position of the slider pin P in the rotating slotted arm OA is controlled by a power screw as shown. At the instant represented, $\theta = 30^o$ $\dot{\theta} = 8$ rad/s, $\ddot{\theta} = -20$ rad/s^2, $r = 200$ mm, $\dot{r} = -300$ mm/s, and $\ddot{r} = 0$.

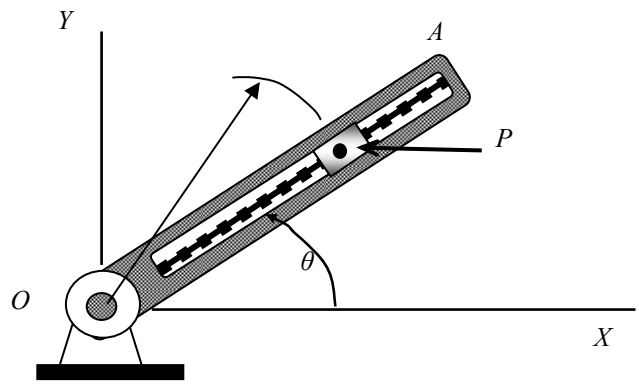

Tasks:

(a) For this instant and determine the velocity and acceleration ***vectors*** of P in the Polar Coordinate System. You must express your answer in vector format using unit vectors appropriate for Polar coordinates.

(b) Find the velocity vector ***components*** to Cartesian and Path Coordinates

You MUST draw the unit vectors for all three coordinate systems. Clearly indicate on the drawing the angle you will be using to transform from one coordinate system to another.

Solution:

(a)

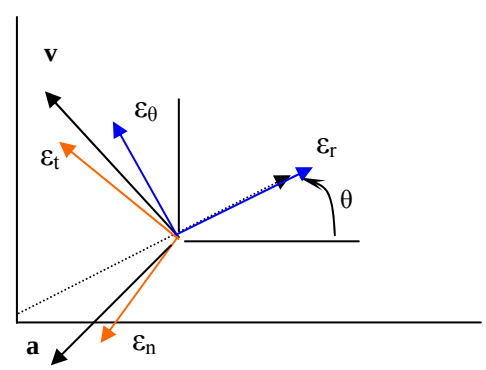

Polar Information: $r = 200$ mm $\quad \theta = 30^o$

$\dot{r} = -300$ mm/s $\quad \dot{\theta} = 8$ rad/s

$\ddot{r} = 0$ mm/s^2 $\quad \ddot{\theta} = -20$ rad/s^2

For r- θ components:

$$\begin{Bmatrix} v_r \\ v_\theta \end{Bmatrix} = \begin{Bmatrix} \dot{r} \\ r\dot{\theta} \end{Bmatrix} = \begin{Bmatrix} -300 \\ 200*8 \end{Bmatrix} \Rightarrow \underline{\underline{\begin{Bmatrix} v_r \\ v_\theta \end{Bmatrix} = \begin{Bmatrix} -300 \\ 1600 \end{Bmatrix} \text{ mm/s}}}$$

Velocity in vector form: $\{v\} = -300\{e_r\} + 1600\{e_\theta\}$ mm/s

$$\begin{Bmatrix} a_r \\ a_\theta \end{Bmatrix} = \begin{Bmatrix} \ddot{r} - r\dot{\theta}^2 \\ r\ddot{\theta} + 2\dot{r}\dot{\theta} \end{Bmatrix} = \begin{Bmatrix} 0 - 200*8^2 \\ 200*(-20) + 2*(-300)*8 \end{Bmatrix} \Rightarrow \underline{\underline{\begin{Bmatrix} a_r \\ a_\theta \end{Bmatrix} = \begin{Bmatrix} -12800 \\ -8800 \end{Bmatrix} \text{ mm/s}^2}}$$

Acceleration in vector form: $\{a\} = -12800\{e_r\} - 8800\{e_\theta\}$ mm/s^2

(b) Magnitude of Velocity Components in Cartesian and Path:

<u>*Transformation from Polar to Cartesian*</u>: clockwise through angle θ.

$$\begin{Bmatrix} v_X \\ v_Y \end{Bmatrix} = \begin{bmatrix} \cos 30 & -\sin 30 \\ \sin 30 & \cos 30 \end{bmatrix} \begin{Bmatrix} -300 \\ 1600 \end{Bmatrix} \Rightarrow \underline{\underline{\begin{Bmatrix} v_X \\ v_Y \end{Bmatrix} = \begin{Bmatrix} -1060 \\ 1236 \end{Bmatrix}}} \text{ mm/s}$$

<u>*Transformation from Cartesian to Path*</u>: Counter-clockwise rotation through angle β (which is greater than 90° in this case)

Need to find direction of velocity relative to positive X-axis, i.e. need to find β. My approach: find angle between positive tangential direction and negative x-asis, β'

$$\begin{aligned} \beta' &= \tan^{-1}\left(\left|\frac{v_y}{v_x}\right|\right) \\ &= \tan^{-1}\left(\frac{1236}{1060}\right) \\ &= 49.38^o \end{aligned}$$

To get β, need to subtract from 180 degrees:

$$\beta = 180 - \beta'$$

$$\underline{\beta = 130.6^o}$$

Transforming:

$$\begin{Bmatrix} v_t \\ v_n \end{Bmatrix} = \begin{bmatrix} \cos 130.6 & \sin 130.6 \\ -\sin 130.6 & \cos 130.6 \end{bmatrix} \begin{Bmatrix} -1060 \\ 1236 \end{Bmatrix} \Rightarrow \underline{\underline{\begin{Bmatrix} v_t \\ v_n \end{Bmatrix} = \begin{Bmatrix} 1628.3 \\ 0 \end{Bmatrix}}} \text{ mm/s}$$