Problem 4: The two blocks shown in the figure below are originally at rest. The friction coefficient (both static and kinetic) is $\mu_d = 0.2$. Neglect the masses of the pulleys.

Tasks:
(a). Find the acceleration (magnitude and direction) of each block
(b). Find the tension in the cable.
(c). How fast are the blocks going after 1 second?
(d). How fast are the blocks going after block B has moved 1 foot?

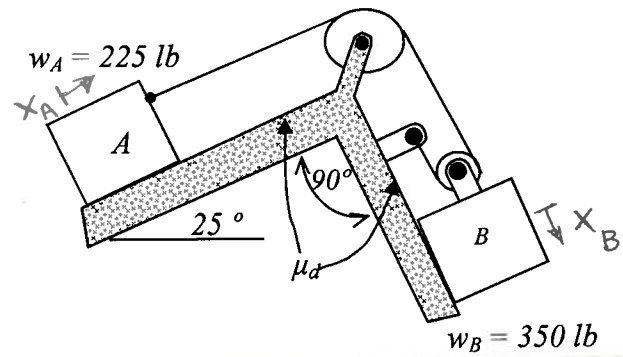

Don't know what direction system will slide, or if it will slide at all.

Make an assumption → I assumed masses will slide in direction shown on figure

Once we calculate accelerations, will need to check this assumption. If assumption incorrect, need to redraw FBD's & resolve (will not be a simple case of a sign flip.)

COORDINATE SYSTEMS

x_A = motion of block A along incline from rest

x_B = motion of block B along incline from rest

KINEMATICS : $x_A = 2x_B$

FBD's – Total Forces:

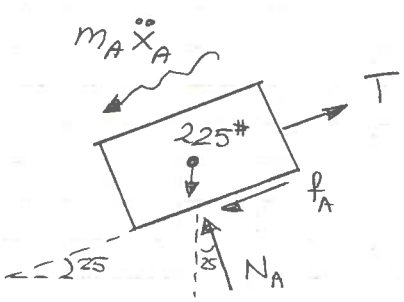

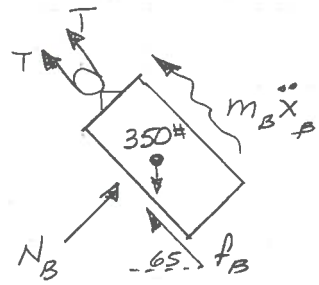

Since assuming blocks <u>are</u> sliding, then friction on FBDs are dynamic friction. So:

$$f_A = \mu N_A \qquad\qquad f_B = \mu N_B$$

Will check assumption later (required)!

EQUILIBRIUM PRINCIPLES

$$m_A \ddot{x}_A + f_A - T + w_A \sin 25^\circ = 0$$

$$m_B \ddot{x}_B + f_B + 2T - w_B \sin 65^\circ = 0$$

$$N_A - w_A \cos 25^\circ = 0 \quad \rightarrow \quad N_A = w_A \cos 25^\circ$$

$$N_B - w_B \cos 65^\circ = 0 \quad \rightarrow \quad N_B = w_B \cos 65^\circ$$

Combining equations:

$$2m_A \ddot{x}_A + m_B \ddot{x}_B + 2(\mu w_A \cos 25^\circ) + \mu w_B \cos 65^\circ + 2w_A \sin 25^\circ - w_B \sin 65^\circ = 0$$

Grouping terms:

$$2m_A \ddot{x}_A + m_B \ddot{x}_B + 2w_A(\mu \cos 25^\circ + \sin 25^\circ) + w_B(\mu \cos 65^\circ - \sin 65^\circ) = 0$$

Subs. Kinematics:

$$(4m_A + m_B)\ddot{x}_B + 2w_A(\mu \cos 25 + \sin 25) + w_B(\mu \cos 65 - \sin 65) = 0$$

Need masses:

$$m_A = \frac{w_A}{g} = \frac{225 \text{ lbs}}{32.2 \text{ ft/s}^2} = 6.988 \text{ lb-s}^2/\text{ft}$$

$$m_B = \frac{w_B}{g} = \frac{350 \text{ lbs}}{32.2 \text{ ft/s}^2} = 10.87 \text{ lb-s}^2/\text{ft}$$

So: $4m_A + m_B = 38.82 \ lb\text{-}s^2/ft$

$$2w_A(\mu \cos 25 + \sin 25) = (0.2 \cos 25 + \sin 25)(225 \text{ lbs})(2)$$
$$= (0.60388)(450 \text{ lbs})$$
$$= 271.75 \text{ lbs}$$

$$w_B(\mu \cos 65 - \sin 65) = (350 \text{ lbs})(0.2 \cos 65 - \sin 65)$$
$$= (350 \text{ lbs})(-0.82178)$$
$$= -287.62 \text{ lbs}$$

Then:

$$(38.82)\ddot{x}_B + 271.75 \text{ lbs} - 287.62 \text{ lbs} = 0$$
$$38.82\ddot{x}_B = 15.87$$
$$\ddot{x}_B = 0.4088 \ ft/s^2$$
$$\ddot{x}_B = 4.906 \ in/s^2$$

Since get (+) number, then guessed correct direction IF blocks truly are sliding. Will need tension force to check that assumption

Determine Tension in cable → to keep blocks from moving:

FBD:
(static)

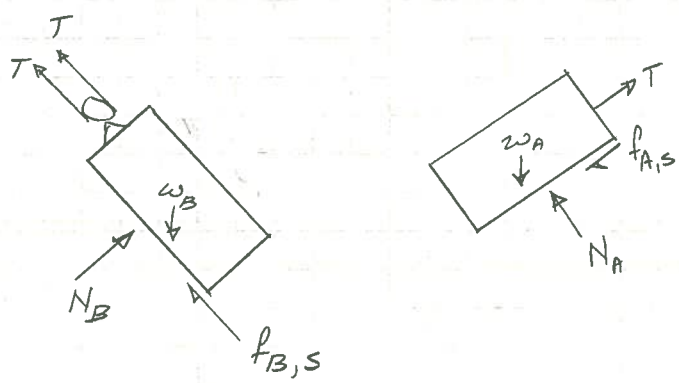

Equilibrium:

$$2T + f_{B,S} - w_B \sin 65° = 0$$
$$f_{A,S} - T + w_A \sin 25° = 0$$

where $f_{B,S}$ = static friction $\qquad f_{A,S}$ = static friction on A

$f_{B,S} \le \mu N_B \qquad f_{AS} \le \mu N_A$

and $f_{B,S\,MAX} = \mu N_B$ = maximum value static friction

For box not to slide:

$$f_{B,s} + 2f_{A,s} \geq w_B \sin 65^\circ - 2w_A \sin 25^\circ$$

$$f_{BS,MAX} + 2f_{A,sMAX} \geq w_B \sin 65^\circ - 2w_A \sin 25^\circ$$

$$\mu(N_B + 2N_A) \geq w_B \sin 65^\circ - 2w_A \sin 25^\circ$$

$$0.2(w_B \cos 65 + 2w_A \cos 25) \geq w_B \sin 65 - 2w_A \sin 25$$

For our example: $111.15 \text{ lbs} \;?\; 127.03 \text{ lbs}$

$111.15 \text{ lbs} < 127.03 \text{ lbs}$

$\therefore$ <u>BOX WILL SLIDE</u>

Note: as long as μ is the same for static & kinetic friction, then as long as you get a (+) value for acceleration then system is in motion

Now that we have checked assumptions; find $\ddot{x}_A$

From Kinematics $x_A = 2x_B$

$$\ddot{x}_A = 2\ddot{x}_B$$

$$\ddot{x}_A = 2(4.906 \text{ in/s}^2)$$

$$\underline{\underline{\ddot{x}_A = 9.812 \text{ in/s}^2}}$$

Answer part (a):

Acceleration box A $\quad \ddot{x}_A = 9.812 \text{ in/s}^2 \;\angle 25^\circ$

Acceleration box B $\quad \ddot{x}_B = 4.906 \text{ in/s}^2 \;\angle 65^\circ$

b) Tension in cable

$$T = m_A \ddot{x}_A + f_A + w_A \sin 25^\circ$$

$$T = (6.988 \text{ lb-s}^2/\text{ft})(9.812 \text{ in}/\text{s}^2)(\text{ft}/12\text{in})$$
$$+ 0.2(225 \text{ lbs}) \cos 25^\circ + (225 \text{ lbs}) \sin 25^\circ$$

$$T = 5.714 \text{ lbs} + 40.78 \text{ lbs} + 95.09 \text{ lbs}$$

$$\underline{\underline{T = 141.6 \text{ lbs}}}$$

c) After 1 second ⇒ response equations for velocity

$$\frac{dv}{dt} = a$$

$$\int_{v_0}^{v} dv = \int_{t_0}^{t} a\,dt$$

$$(v - v_0) = \int_{t_0}^{t} a\,dt$$

For Block A:
$v = \dot{x}_A \qquad a = \ddot{x}_A$

For Block B
$v = \dot{x}_B \qquad a = \ddot{x}_B$

For both blocks: $v_0 = 0$
initially @ rest

$$\dot{x}_A = \int_0^t 9.812\,dt = 9.812t$$

$$\dot{x}_B = \int_0^t 4.906\,dt = 4.906t$$

@ 1 sec:

$$\dot{x}_A(t=1) = 9.812 \text{ in}/\text{s}$$

$$\dot{x}_B(t=1) = 4.906 \text{ in}/\text{s}$$

d) How fast after 1 foot? Need displacement eqn

$$\frac{dx}{dt} = v$$

$$\int_{x_0}^{x} dx = \int_{t_0}^{t} v\,dt$$

$$(x - x_0) = \int_{t_0}^{t} v\,dt$$

$$(x_A - x_{A0}) = \int_0^t (9.812t)\,dt = 4.906\,t^2$$

$$(x_B - x_{B0}) = \int_0^t (4.906t)\,dt = 2.453\,t^2$$

Block B moves 1 foot $\therefore$ $x_B - x_{B0} = 1\,ft = 12\,in$

$$(12\,in) = 2.453t^2$$

$$4.8196\,s^2 = t^2$$

$$2.2118\,sec = t$$

Substitute time to travel 1 foot into speed equations

$$\dot{x}_A(t = 2.2118\,s) = 9.812\,(2.2118\,s) = \underline{\underline{21.7\,in/s}}$$

$$\dot{x}_B(t = 2.2118\,s) = 4.906\,(2.2118\,s) = \underline{\underline{10.85\,in/s}}$$