Problem 5 (20 points) The load L shown in the Figure is lowered by the two pulleys which are fastened together and rotate as a single unit. For the instant represented, drum A has a counter-clockwise angular velocity of 6 rad/sec, which is decreasing by 4.5 rad/sec^2. Simultaneously, drum B has a clockwise angular velocity of 5 rad/sec, which is increasing by 1.75 rad/sec^2.

Task: Calculate the acceleration of point D and the load L.

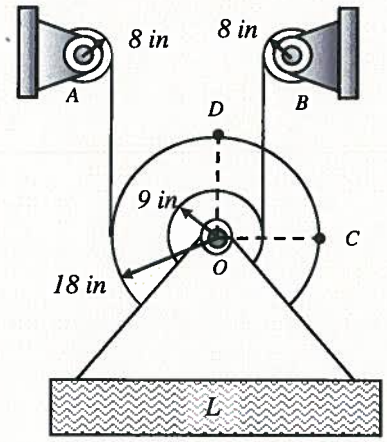

Problem 5

Solution

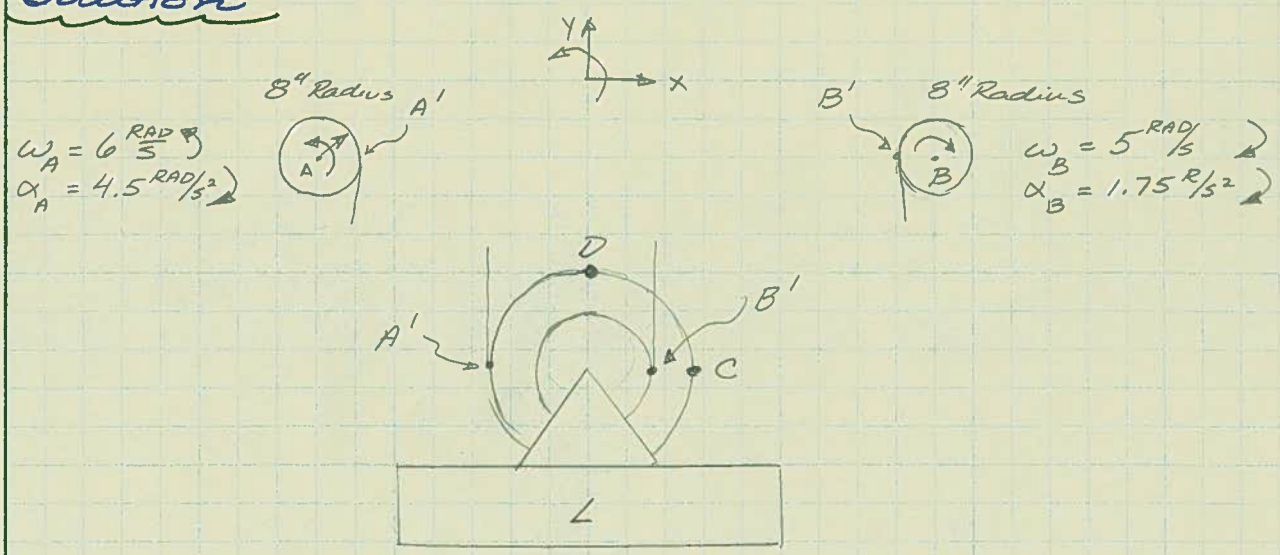

Tangential velocity & acceleration components @ A' & B' are equal on both rigid bodies.

<u>Determine ω for pulley supporting load</u> (Pulley 0)

$$\{V_A\} = \{\omega_A\} \times \{r_{OA'}\} = 6\{k\} \times 8\{i\}$$
$$= (48\ \text{in/s})(\{k\} \times \{i\}) = 48\{j\}\ \text{in/s}$$

$$\{V_{B'}\} = \{\omega_B\} \times \{r_{OB'}\} = (-5)\{k\} \times (-8)\{i\}$$
$$= (40\ \text{in/s})(\{k\} \times \{i\}) = 40\{j\}\ \text{in/s}$$

Now looking @ pulley:

$$\{V_{A'}\} = \{V_{B'}\} + \{\omega\} \times \{r_{B'A'}\}$$

$$48\{j\} = 40\{j\} + \omega\{k\} \times (-18-9)\{i\}$$
$$48\{j\} = 40\{j\} + (-27\omega)\{j\}$$

Looking @ coef of $\{j\}$:

$$48 = 40 - 27\omega$$
$$\omega = -8/27\ \text{rad/s} = -0.296\ \text{RAD/s}$$

$$\{\omega\} = -0.2963\{k\}\ \text{RAD/s}$$

<u>Determine α for pulley 0</u>

$$\{a_{A'}\} = \{\alpha_A\} \times \{r_{OA'}\} + \{\omega_A\} \times (\{\omega_A\} \times \{r_{OA}\})$$
$$= (-4.5)\{k\} \times 8\{i\} + 6\{k\} \times (6\{k\} \times 8\{i\})$$
$$\{a_{A'}\} = \underbrace{-36\{j\}}_{\text{only component 'transfers' to pulley}} - 288\{i\}\ \text{in/s}^2$$

$$\{a_{B'}\} = \{\alpha_B\} \times \{r_{OB}\} + \{\omega_B\} \times (\{\omega_B\} \times \{r_{OB}\})$$
$$= (-1.75)\{k\} \times (-8\{i\}) + (-5)\{k\} \times ((-5)\{k\} \times (-8)\{i\})$$
$$= \underbrace{14\{j\}}_{\text{only component 'transfers' to pulley}} + 200\{i\}\ \text{in/s}^2$$

TOPS 35500

Looking @ Pulley O

$$\{a_{A'}\} = \{a_{B'}\} + \{\alpha\} \times \{r_{BA}\} + \{\omega\} \times \left(\{\omega\} \times \{r_{BA}\}\right)$$

$$a_{Ax}\{i\} - 36\{j\} = \left(a_{Bx}\{i\} + 14\{j\}\right) + \alpha\{k\} \times (-27)\{i\}$$
$$+ (-0.296\{k\}) \times \left(-0.296\{k\} \times (-27)\{i\}\right)$$

$$a_{Ax}\{i\} - 36\{j\} = \left(a_{Bx}\{i\} + 14\{j\}\right) - 27\alpha\{j\} + 2.37\{i\}$$

$$a_{Ax}\{i\} - 36\{j\} = \left(a_{Bx} + 2.37\right)\{i\} + \left(+14 - 27\alpha\right)\{j\}$$

From component in $\{j\}$: $-36 = +14 - 27\alpha$

$-50 = -27\alpha$

$\alpha = 1.852$ RAD/s²

$\{\alpha\} = 1.852\{k\}$ RAD/s²

To determine component in x-dir, use knowledge that @ center of pulley motion is perfectly downwards

$$\{v_o\} = 0\{i\} + v_{oy}\{j\} \quad ; \quad \{a_o\} = 0\{i\} + a_{oy}\{j\}$$

$$\{a_B\} = \{a_o\} + \{\alpha\} \times \{r_{OB}\} + \{\omega\} \times \{\omega\} \times \{r_{OB}\}$$

$$\left(a_{Bx}\{i\} + 14\{j\}\right) = a_{oy}\{j\} + \left(1.852\{k\}\right) \times \left(9\{i\}\right)$$
$$+ (-0.296\{k\}) \times \left(-0.296\{k\} \times 9\{i\}\right)$$

$$a_{Bx}\{i\} + 14\{j\} = a_{oy}\{j\} + 16.668\{j\} - 0.790\{i\}$$

Component in $\{i\}$: $a_{Bx} = -0.790$ in/s²

Component in $\{j\}$: $+14 = a_{oy} + 16.668$ in/s²

$a_{oy} = -2.668$ in/s²

Since load has same properties as pulley center:

$$\underline{\underline{\{a_L\} = -2.668 \text{ in/s}^2\{j\}}}$$

Acceleration of Point D:

$$\{a_D\} = \{a_o\} + \{\alpha\} \times \{r_{OD}\} + \{\omega\} \times \{\omega\} \times \{r_{OD}\}$$

$$= -2.668\ \{j\} + 1.852\ \{k\} \times 18\{j\}$$

$$+ (-0.296\{k\}) \times (-0.296\{k\} \times 18\{j\})$$

$$= -2.668\{j\} - 33.336\{i\} - 1.577\ \{j\}$$

$$= \underline{\underline{-33.336\ \{i\} - 4.245\{j\}\ \ in/s^2}}$$

TOPS. 35500