Problem 3 (Text 4.24) The angular position of link OA shown in Figure Problem 4.16 is given as a known function of time. Link OA is connected to link CB through the sliding collar A, and CB is connected to ground by a hinge at C.

Tasks:

(a). State the general equations defining the orientation of link *CB* and the distance from *C* to A.
(b). Sate the general equations defining the angular velocity of link *CB*.
(c). State the general equations defining the angular acceleration of link *CB*.
(d). State the general equations defining the acceleration of point *B*.

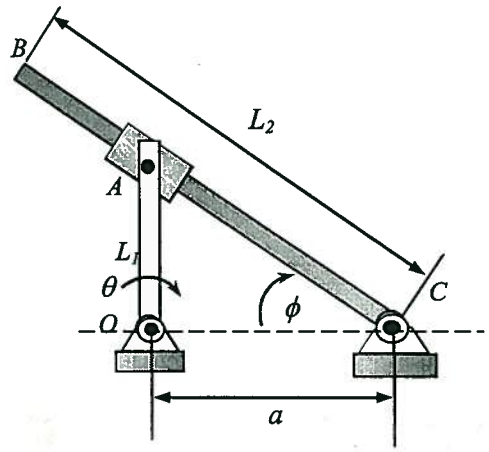

Draw general configuration & coordinates:

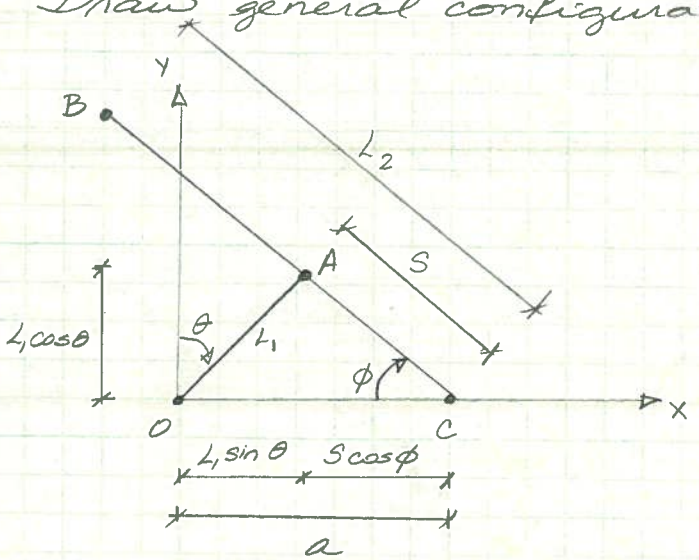

Kinematic Constraints

X: $L_1 \sin\theta + S\cos\phi = a$

Y: $L_1 \cos\theta = S\sin\phi$

Can now manipulate for equations of $S(t)$ and $\phi(t)$. Example:

Taking equation in Y-dir: $S = L_1 \dfrac{\cos\theta}{\sin\phi}$

Substitute into x-dir: $L_1 \sin\theta + L_1 \cos\theta \left(\dfrac{\cos\phi}{\sin\phi}\right) = a$

$$\frac{1}{\tan\phi} = \frac{(a - L_1 \sin\theta)}{L_1 \cos\theta}$$

$$\phi = \tan^{-1}\left(\frac{L_1 \cos\theta}{a - L_1 \sin\theta}\right)$$

Substitute & solve for S:

$$S = L_1 \cos\theta \left[\sin\left(\tan^{-1}\left(\frac{L_1 \cos\theta}{a - L_1 \sin\theta}\right)\right)\right]^{-1}$$

b) General Equation for angular velocity of CB

$$\{\omega_{CB}\} = \dot{\phi}\{K\}$$

So must take derivatives of S & ϕ. Do this for kinematic constraint Equations! Easier than taking derivatives of above $S(t)$ & $\phi(t)$

So:

- $\frac{d}{dt}\left(L_1 \sin\theta + S\cos\phi = a\right)$ Note: θ, S, & ϕ are functions of time!

$$L_1 \dot{\theta} \cos\theta + \dot{S}\cos\phi - S\dot{\phi}\sin\phi = 0$$

- $\frac{d}{dt}\left(L_1 \cos\theta - S\sin\phi = 0\right)$

$$-L_1 \dot{\theta} \sin\theta - \dot{S}\sin\phi - S\dot{\phi}\cos\phi = 0$$

Rearranging, get following system:

$$\underline{\underline{\dot{S}}}\cos\phi - \underline{\underline{\dot{\phi}}}(S\sin\phi) = -L_1 \dot{\theta}\cos\theta$$

$$\underline{\underline{\dot{S}}}\sin\phi + \underline{\underline{\dot{\phi}}}(S\cos\phi) = -L_1 \dot{\theta}\sin\theta$$

System of equations where unknown variables are $\dot{S}$ and $\dot{\phi}$ (underlined above for emphasis).

Use Cramer's Rule to Solve:

$$D = \begin{vmatrix} \cos\phi & -(S\sin\phi) \\ \sin\phi & (S\cos\phi) \end{vmatrix}$$

$$= S\cos^2\phi + S\sin^2\phi$$

$$= S(\cos^2\phi + \sin^2\phi)$$

$$= S$$

$$\dot{S} = \frac{\begin{vmatrix} -L_1\dot{\theta}\cos\theta & -(S\sin\phi) \\ -L_1\dot{\theta}\sin\theta & (S\cos\phi) \end{vmatrix}}{D}$$

$$= \frac{[-(L_1\dot{\theta}\cos\theta)(S\cos\phi) - (L_1\dot{\theta}\sin\theta)(S\sin\phi)]}{S}$$

$$= -(L_1\dot{\theta})[\cos\theta\cos\phi - \sin\theta\sin\phi]$$

$$= -L_1\dot{\theta}\cos(\theta-\phi)$$

$$\dot{\phi} = \frac{\begin{vmatrix} \cos\phi & -L_1\dot{\theta}\cos\theta \\ \sin\phi & -L_1\dot{\theta}\sin\theta \end{vmatrix}}{D}$$

$$= \frac{1}{S}[(\cos\phi)(-L_1\dot{\theta}\sin\theta) + (L_1\dot{\theta}\cos\theta)(\sin\phi)]$$

$$= \frac{L_1\dot{\theta}}{S}[\cos\theta\sin\phi - \cos\phi\sin\theta]$$

$$= \frac{L_1\dot{\theta}}{S}\sin(\theta-\phi)$$

General equation for magnitude of angular velocity of link CB.

c) Take second derivatives to get acceleration relations:

<u>X dir</u>:

$$L_1\ddot{\theta}\cos\theta - L_1\dot{\theta}^2\sin\theta + \underline{\underline{\ddot{S}}}\cos\phi - \dot{S}\dot{\phi}\sin\phi - \dot{S}\dot{\phi}\sin\phi - S\underline{\underline{\ddot{\phi}}}\sin\phi - S\dot{\phi}^2\cos\phi = 0$$

<u>Y-dir</u>

$$-L_1\ddot{\theta}\sin\theta - L_1\dot{\theta}^2\cos\theta - \underline{\underline{\ddot{S}}}\sin\phi - \dot{S}\dot{\phi}\cos\phi - \dot{S}\dot{\phi}\cos\phi - S\underline{\underline{\ddot{\phi}}}\cos\phi + S\dot{\phi}^2\sin\phi = 0$$

or in matrix form: (variables are $\ddot{S}$ and $\ddot{\phi}$)

$$\begin{bmatrix} \cos\phi & -S\sin\phi \\ -\sin\phi & -S\cos\phi \end{bmatrix} \begin{Bmatrix} \ddot{S} \\ \ddot{\phi} \end{Bmatrix} = \begin{Bmatrix} -L_1\ddot{\theta}\cos\theta + L_1\dot{\theta}^2\sin\theta + 2\dot{S}\dot{\phi}\sin\phi + S\dot{\phi}^2\cos\phi \\ L_1\ddot{\theta}\sin\theta + L_1\dot{\theta}^2\cos\theta + 2\dot{S}\dot{\phi}\cos\phi - S\dot{\phi}^2\sin\phi \end{Bmatrix} = \begin{Bmatrix} f_1 \\ f_2 \end{Bmatrix}$$

=

Applying Crammer's Rule:

$$D = \begin{vmatrix} \cos\phi & -S\sin\phi \\ -\sin\phi & -S\cos\phi \end{vmatrix} = -S\cos^2\phi - S\sin^2\phi = -S$$

$$\ddot{S} = \frac{\begin{vmatrix} f_1 & -S\sin\phi \\ f_2 & -S\cos\phi \end{vmatrix}}{(-S)} = \frac{-1}{S}\left(f_1(-S\cos\phi) - f_2(-S\sin\phi)\right)$$

$$= f_1\cos\phi - f_2\sin\phi$$

$$\ddot{\phi} = \frac{\begin{vmatrix} \cos\phi & f_1 \\ -\sin\phi & f_2 \end{vmatrix}}{(-S)} = -\frac{1}{S}\left(f_2\cos\phi + f_1\sin\phi\right)$$

Substitute for f_1 and f_2

$$\ddot{s} = \left(-L_1\ddot{\theta}\cos\theta + L_1\dot{\theta}^2\sin\theta + 2\dot{s}\dot{\phi}\sin\phi + s\dot{\phi}^2\cos\phi\right)\cos\phi$$
$$- \left(L_1\ddot{\theta}\sin\theta + L_1\dot{\theta}^2\cos\theta + 2\dot{s}\dot{\phi}\cos\phi - s\dot{\phi}^2\sin\phi\right)\sin\phi$$

$$= -L_1\ddot{\theta}\left(\cos\theta\cos\phi - \sin\theta\sin\phi\right) + L_1\dot{\theta}^2\left(\sin\theta\cos\phi - \cos\theta\sin\phi\right)$$
$$+ 2\dot{s}\dot{\phi}\underbrace{\left(\sin\phi\cos\phi - \cos\phi\sin\phi\right)}_{0} + s\dot{\phi}^2\underbrace{\left(\cos^2\phi + \sin^2\phi\right)}_{1}$$

$$= -L_1\ddot{\theta}\left(\cos(\theta+\phi)\right) + L_1\dot{\theta}^2\sin(\theta-\phi) + s\dot{\phi}^2$$

$$\underline{\underline{= -L_1\ddot{\theta}\cos(\theta+\phi) + L_1\dot{\theta}^2\sin(\theta-\phi) + s\dot{\phi}^2}}$$

$$\ddot{\phi} = -\frac{1}{s}\Big[\left(L_1\ddot{\theta}\sin\theta + L_1\dot{\theta}^2\cos\theta + 2\dot{s}\dot{\phi}\cos\phi - s\dot{\phi}^2\sin\phi\right)\cos\phi$$
$$+ \left(-L_1\ddot{\theta}\cos\theta + L_1\dot{\theta}^2\sin\theta + 2\dot{s}\dot{\phi}\sin\phi + s\dot{\phi}^2\cos\phi\right)\sin\phi\Big]$$

$$= \frac{-1}{s}\Big[L_1\ddot{\theta}\left(\sin\theta\cos\phi - \cos\theta\sin\phi\right) + L_1\dot{\theta}^2\left(\cos\theta\cos\phi + \sin\theta\sin\phi\right)$$
$$+ 2\dot{s}\dot{\phi}\left(\cos^2\phi + \sin^2\phi\right) + s\dot{\phi}^2\left(-\sin\phi\cos\phi + \cos\phi\sin\phi\right)\Big]$$

$$\underline{\underline{= -\frac{1}{s}\left[L_1\ddot{\theta}\sin(\theta-\phi) + L_1\dot{\theta}^2\cos(\theta-\phi) + 2\dot{s}\dot{\phi}\right]}}$$