Problem 1: A wardrobe that weighs 2000 N rests on roller wheels at A and B. Suppose that a person pushes with a horizontal force of 500 N as shown and the rollers remain on the floor (*i.e. no tipping*). What is the normal force exerted on the roller B.

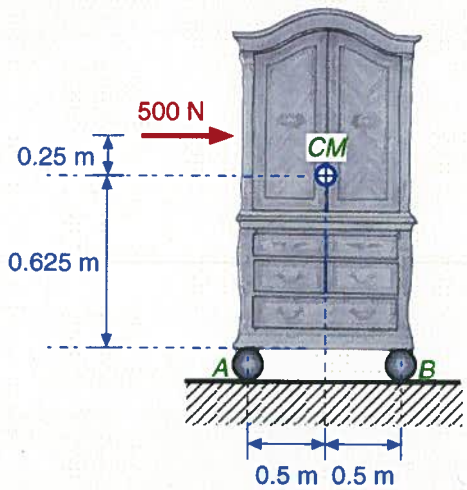

FBD

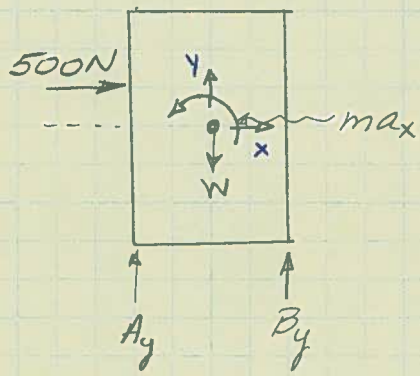

• indicates Center of Mass (CM)

$W = 2000N$

Coordinate system has origin @ C.M.

a_x = acceleration of CM in x-dir
a_y = " " in y-dir
$\ddot{\theta}$ = rotational accel about CM

If wardrobe not tipping: $a_y = 0$ $\ddot{\theta} = 0$

$\Sigma F_y = 0$ $A_y + B_y - W = 0$ $A_y + B_y = 2000N$

$\Sigma M_{CM} = 0$ $A_y(0.5m) + (500N)(0.25m) - B_y(0.5m) = 0$

Combining: $\underline{\underline{B_y = 1125\ N}}$